EXPERIMENT 1

Arya Basak

23MS233

AIM: Study of Zener diode as a voltage regulator and use of IC 7805 voltage stabilizer.

ELECTRONIC COMPONENTS REQUIRED:

1. Power supply: ± 15 V
2. $R_S = R_C = 2.2$ KΩ = 2 Nos
3. Load resistance = $R_L = 1.0$ kΩ
4. Potentiometer, 1.0 W
5. Zener diode = 1 No with VZ = 2.7 or 3.9 or 5.1 V
6. LM7805 IC = 1 No
7. Breadboard = 1 No
8. 2 DT-830D multi-meters for current measurements.
9. One 8007 multimeter with probe for Voltage measurements.
10. Single stand wires = 6 Nos

THEORY:

1) Zener Diode:

The Zener diode is like a general-purpose diode and when biased in the forward direction it behaves just like a normal regular diode, but when a reverse voltage is applied to it, the voltage remains constant for a wide range of currents.

Avalanche Breakdown: There is a limit for the reverse voltage. Reverse voltage can increase until the diode breakdown voltage reaches. This point is called Avalanche Breakdown region. At this stage maximum current will flow through the Zener diode. This breakdown point is referred as **"Zener voltage".** Zener diode is used always in reverse biased condition.

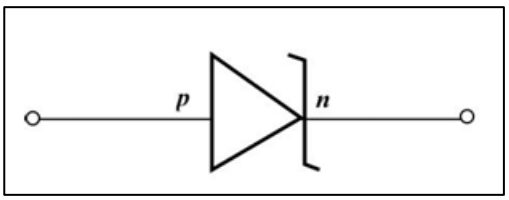

Figure 1: Circuit Symbol of Zener Diode

2) Characteristics Curve:

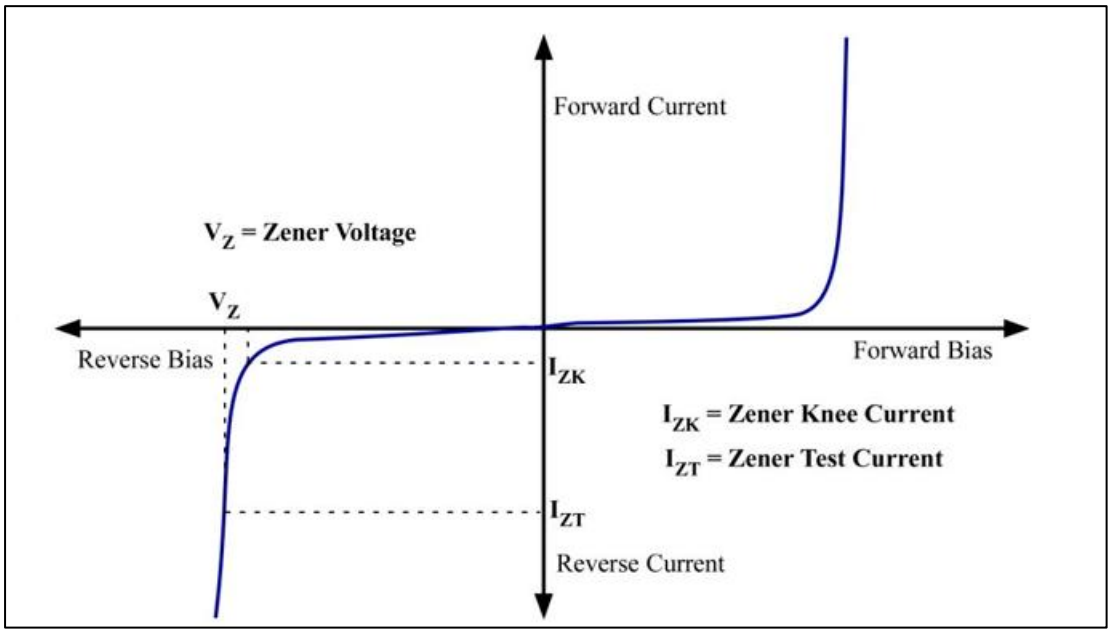

Figure 2: Characteristics Curve of a Zener Diode

A Zener diode behaves like a normal diode in forward bias. In reverse bias, it initially allows only a small leakage current. As the reverse voltage approaches the Zener breakdown voltage, the current increases rapidly due to avalanche breakdown, while the voltage across the diode remains nearly constant.

There is a minimum Zener current, $I_{ZT(min)}$, required to ensure proper operation in the breakdown region and a maximum current limit, $I_{ZT(max)}$, beyond which excessive power dissipation can damage the diode. As long as the current stays between these limits, the Zener diode maintains an almost constant reverse voltage despite large current variations.

This property makes the Zener diode especially useful as a voltage regulator, where it stabilizes or regulates voltage when operated in reverse bias within its breakdown region.

PART A: Zener Diode as a Voltage Regulator:

1) <u>WORKING PRINCIPLE:</u>

A voltage regulator maintains a constant output voltage across a load despite changes in supply voltage or load current. A Zener diode performs this function by operating in its

reverse breakdown region, where the voltage across it remains nearly constant over a wide range of currents.

In a Zener diode shunt regulator, the Zener diode is connected in parallel with the load and a series resistor is used to limit current. The resistor is chosen so that even at minimum input voltage and maximum load current, the Zener current stays above the minimum required for regulation. Under other conditions, the Zener diode absorbs excess current to keep the load voltage constant.

The Zener conducts the least current when load current is highest and the most current when load current is lowest. Shunt regulators also provide inherent current limiting during fault conditions, as the series resistor restricts excessive current and allows safe power dissipation.

2) CIRCUIT DIAGRAM:

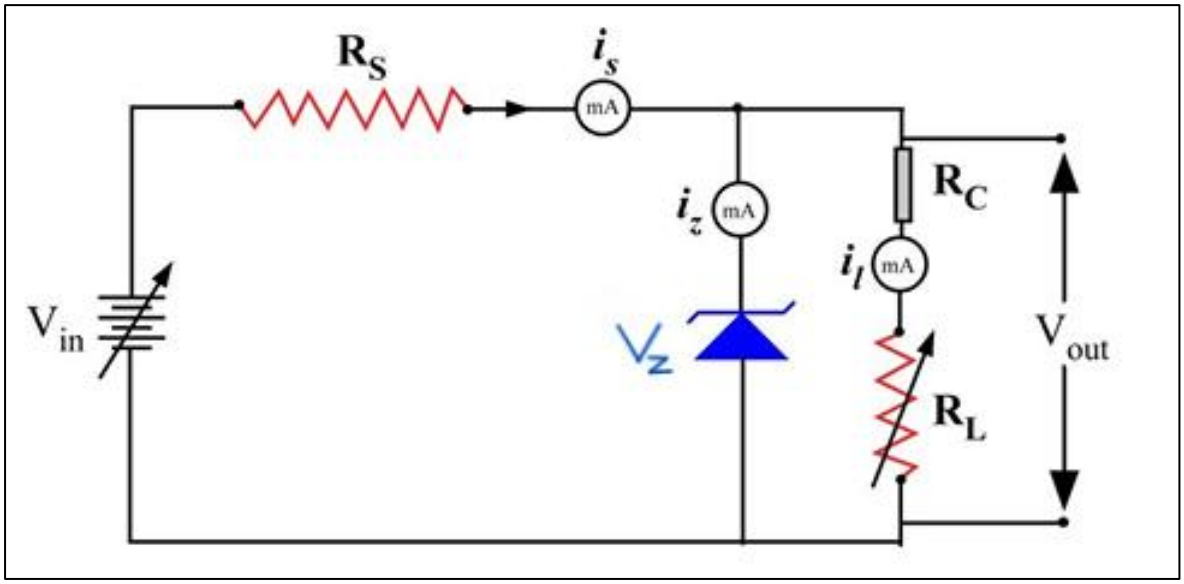

Figure 3: Circuit Diagram of Zener Diode as a voltage regulator

A Zener diode with breakdown voltage (V_Z) is connected in reverse bias across a load, with a series resistor and an input voltage source. When operating in the breakdown region, the voltage across the Zener diode remains constant at (V_Z).

As long as the input voltage is greater than (V_Z) and the Zener current stays within its breakdown limits, the diode maintains a constant output voltage ($V_0 = V_Z$), regardless of changes in load resistance or variations in the input voltage.

From the circuit diagram we can write:

$$i_S = i_z + i_L$$

where

$$i_S = \frac{V - V_Z}{R_S} \quad \text{and} \quad i_L = \frac{V_0}{R_L}$$

There are 2 types of regulations:

(a) Line Regulation:

In line regulation, series resistance, R_S and load resistance, R_L are fixed, only input voltage, V_{in} is varied. Output voltage, V_0 remains the same at V_Z and i_L remains constant as long as the input voltage is maintained above a minimum value.

$$\delta i_S = \delta i_Z$$

(b) Load Regulation:

In load regulation, input voltage, V_i remains constant and the load resistance, R_L is varied. Output voltage remains same, as long as the load resistance is maintained above a minimum value. Since the voltage V_Z across the Zener remains constant, i_S is independent of load. Hence in this case,

$$\delta i_Z = -\delta i_L$$

3) OBSERVATIONS AND CALCULATIONS:

The entire data for this experiment can be found at this link:

https://docs.google.com/spreadsheets/d/1VmT6Wf0Wax6PgpOqL2ajzA2zjVttcpc3/edit?usp=sharing&ouid=114042901282709641907&rtpof=true&sd=true

1) Line Regulation:

a) Graph 1

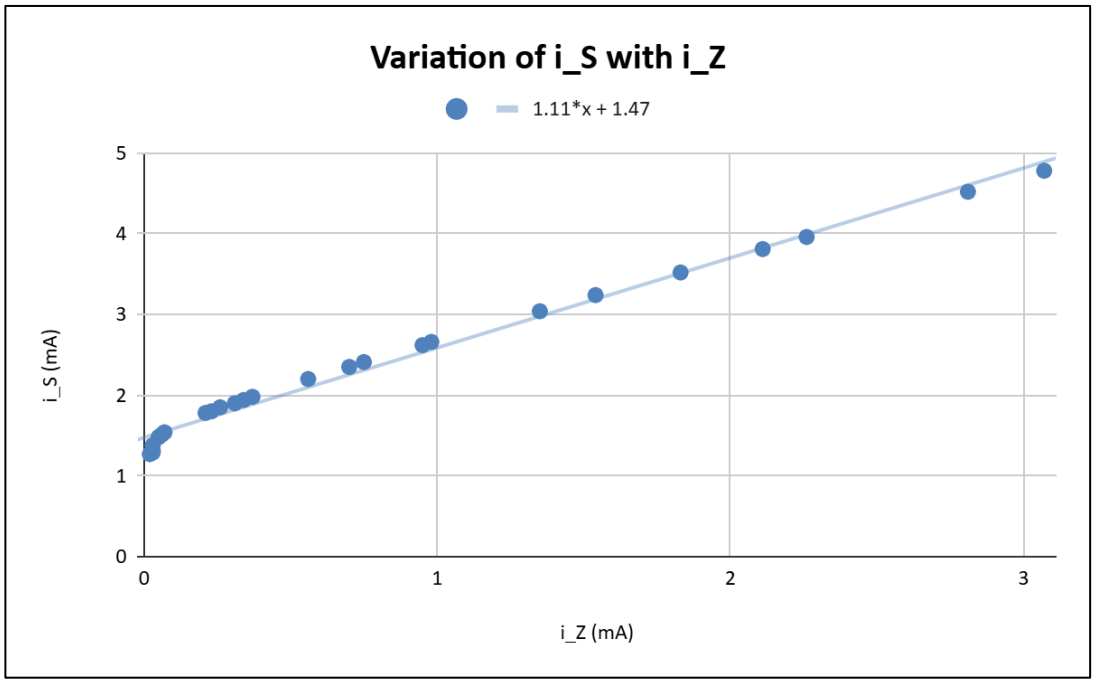

As can be seen from the graph, i_s is directly proportional to i_z (slope close to 1), confirming the equation:

$$\delta i_S = \delta i_Z$$

b) Graph 2

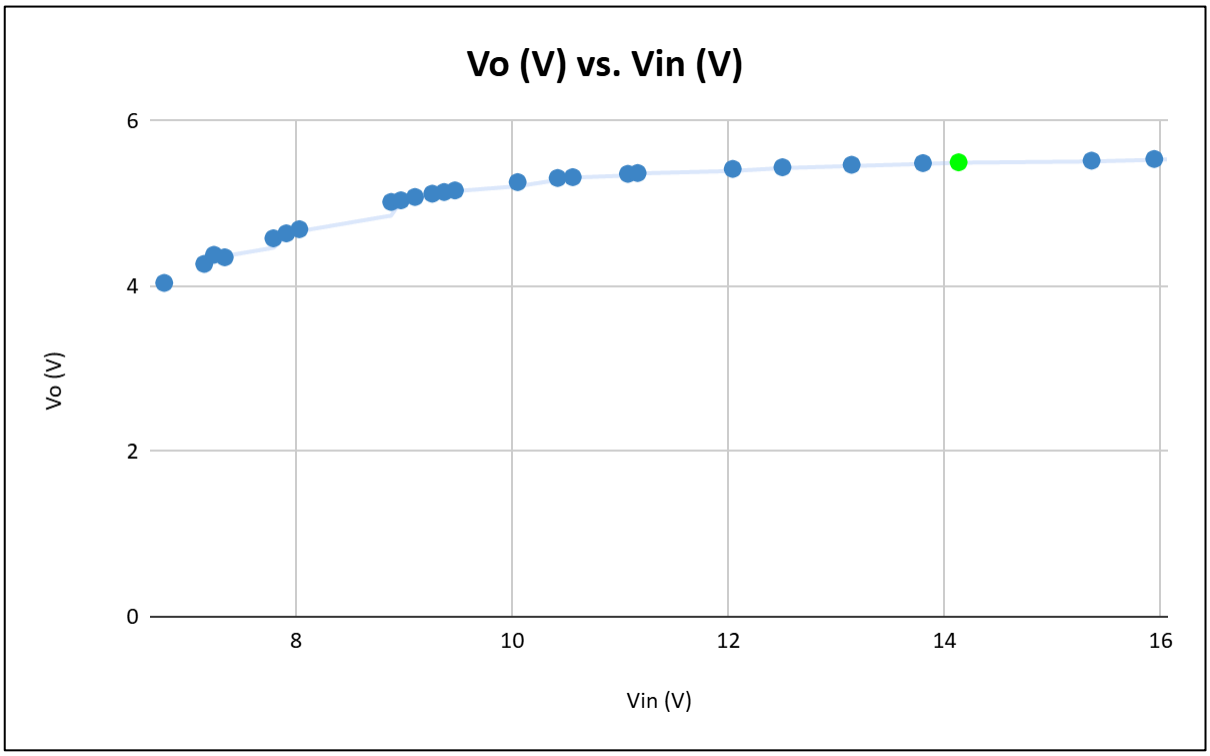

As can be seen from the graph, V_0 stays constant with changing V_{in} at a value of **V_Z = 5.5 V** (marked in green). Thus, the Zener breakdown voltage is:

$$\mathbf{V_Z = 5.5\ V}$$

2) Load Regulation:

V_{in} = 13.15 V

R_C = 2.2 kΩ

a) With R_C

Graph 1:

As can be seen from the graph, i_L decrease linearly with changing i_Z (slope close to 1), confirming the equation:

$$\delta i_Z = -\delta i_L$$

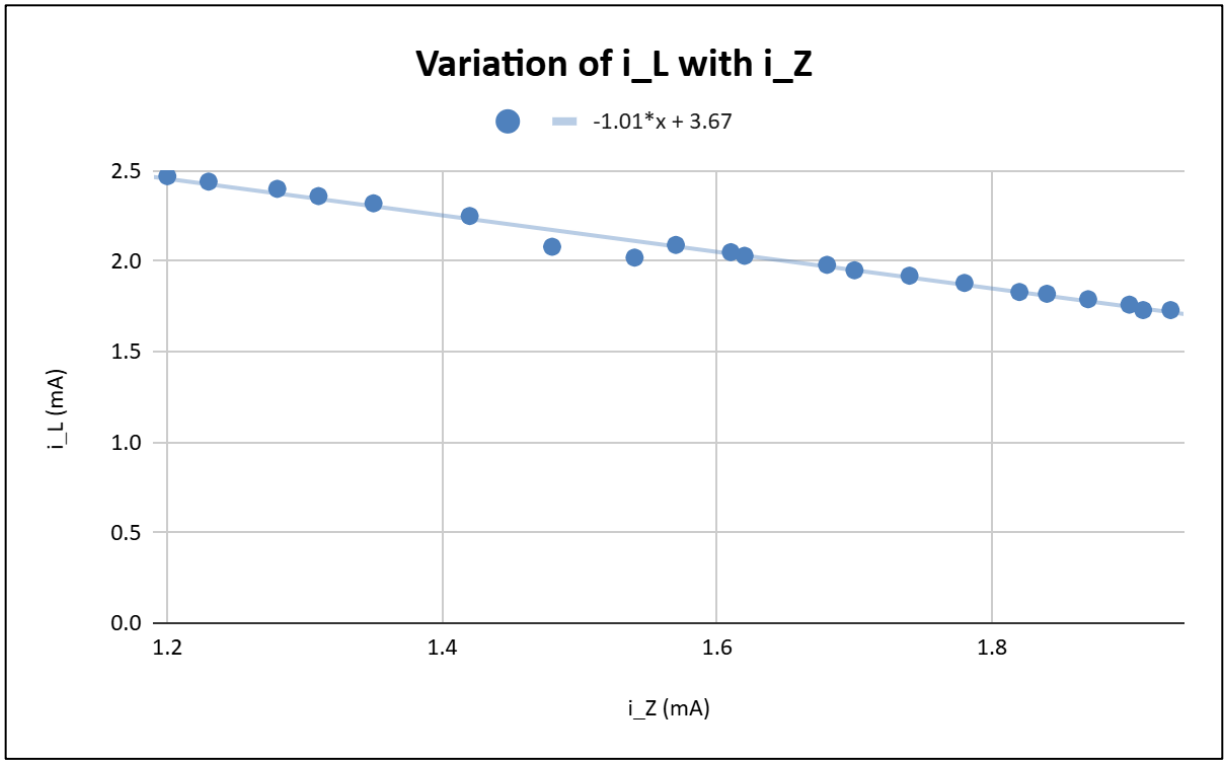

Graph 2:

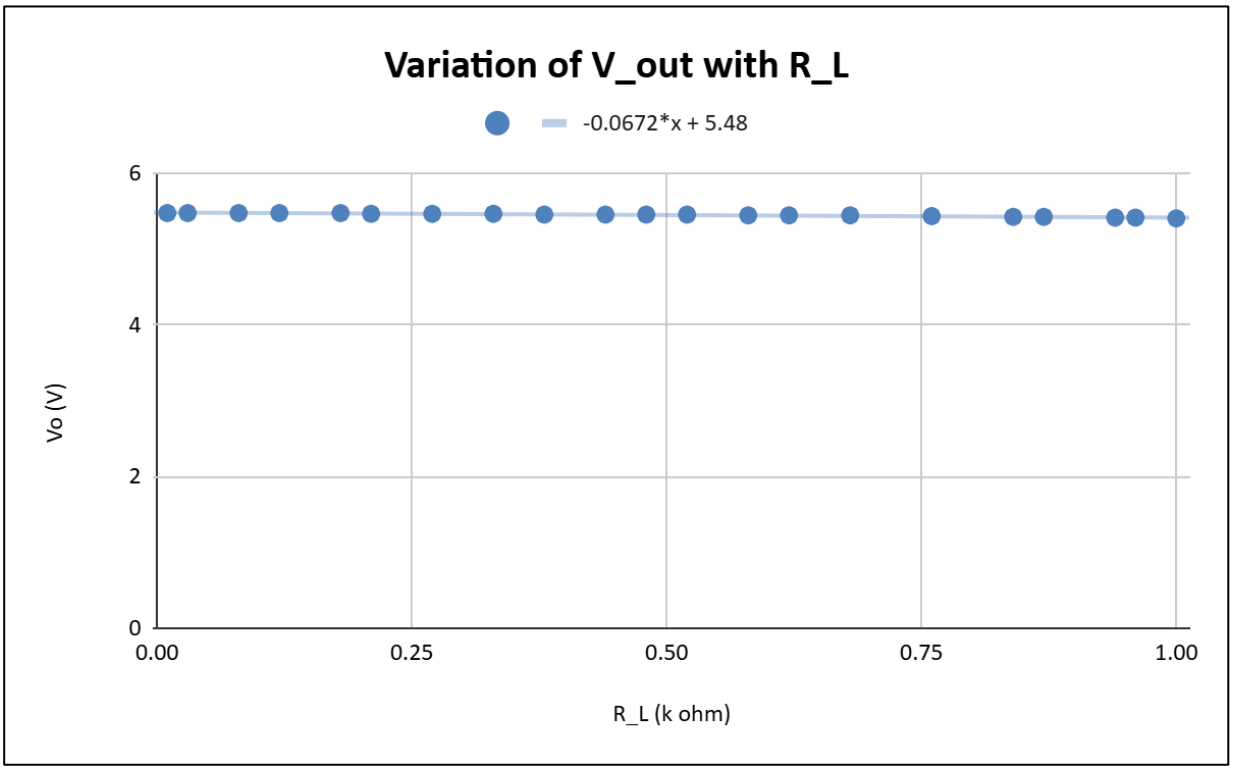

As can be seen from the graph, we can easily calculate V_Z from here (a flat line constant with varying R_L). Zener breakdown voltage:

V_Z = 5.45 V

b) Without R_C

Graph 1:

As can be seen from the graph, i_L decrease linearly with changing i_Z, confirming the equation:

$$\delta i_Z = -\delta i_L$$

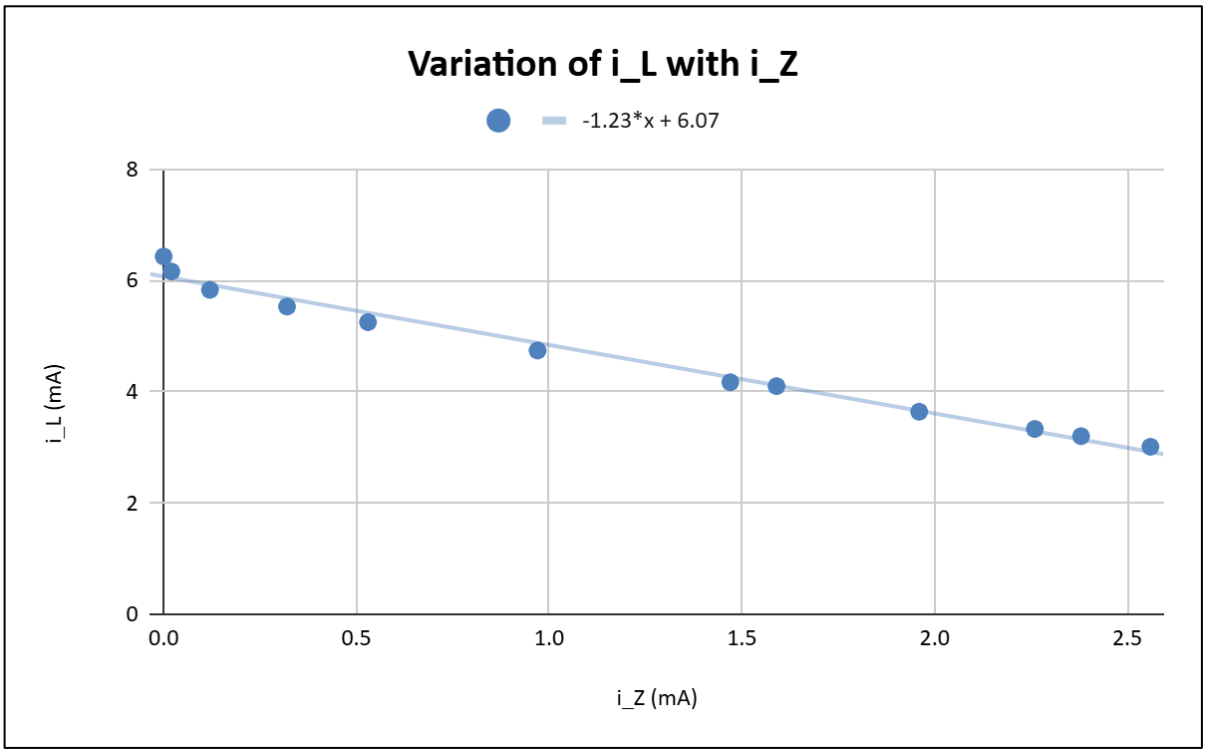

R_C is known as the current limiting constant resistor. Without R_C:

$$i_L = \frac{V_0}{R_L}$$

Graph 2:

As R_L becomes small, i_L increases rapidly and Zener current(i_Z) drops fast. There is a very small range of RL where Vo ≈ V_Z. There is sharp drop in Vo for heavy load. Therefore, it provides very poor regulation and we cannot determine a proper value where Vo becomes constant (plateau in the curve) hence we cannot determine the Breakdown voltage (V_Z).

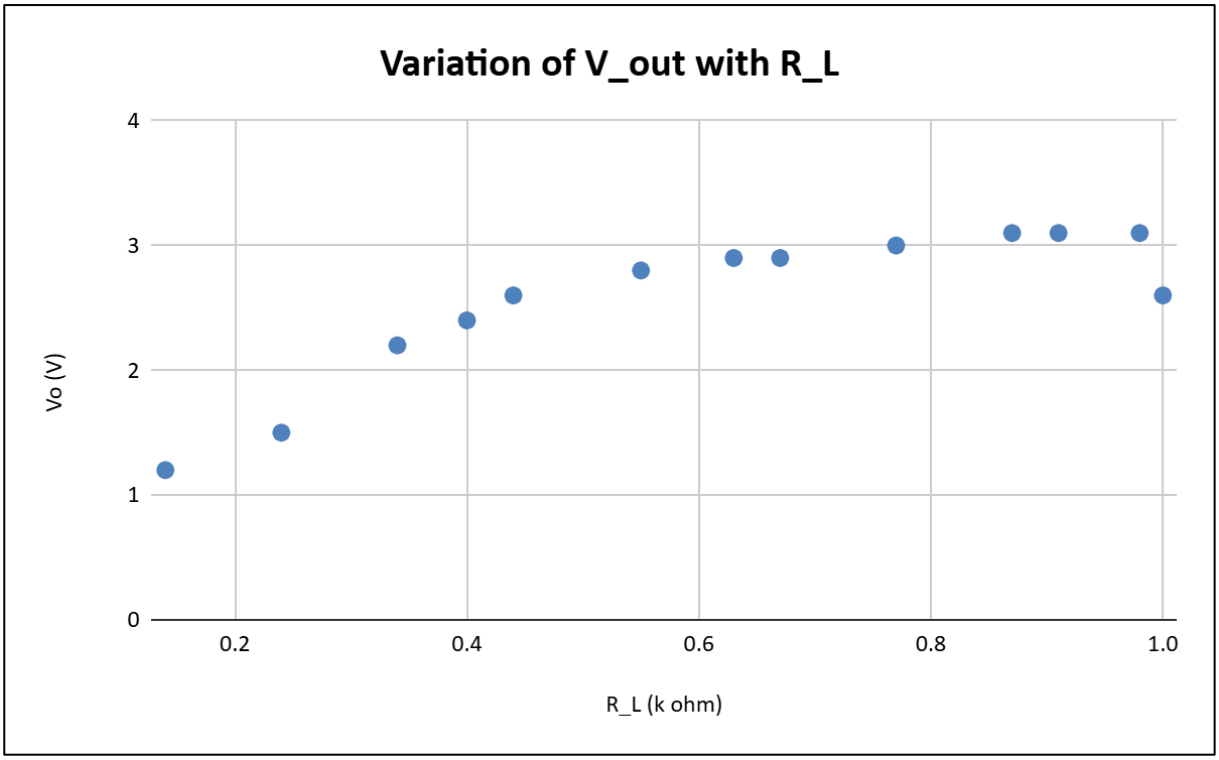

PART B: Voltage Regulator IC 7805

1) <u>WORKING PRINCIPLE:</u>

Although a Zener diode can act as a voltage regulator, it has limitations: the output voltage is not perfectly regulated and increases slightly with input voltage, and it can supply only a small current (a few milliamps). Because of these drawbacks, modern circuits commonly use IC-based voltage regulators.

The IC 7805 belongs to the 78XX series of voltage regulators, where the last two digits indicate the regulated output voltage. For example, 7805 provides 5 V and 7806 provides 6 V. The 7805 has three pins: pin 1 for input voltage, pin 2 for ground, and pin 3 for the regulated output. Compared to Zener diode regulators, the 7805 offers much better voltage regulation.

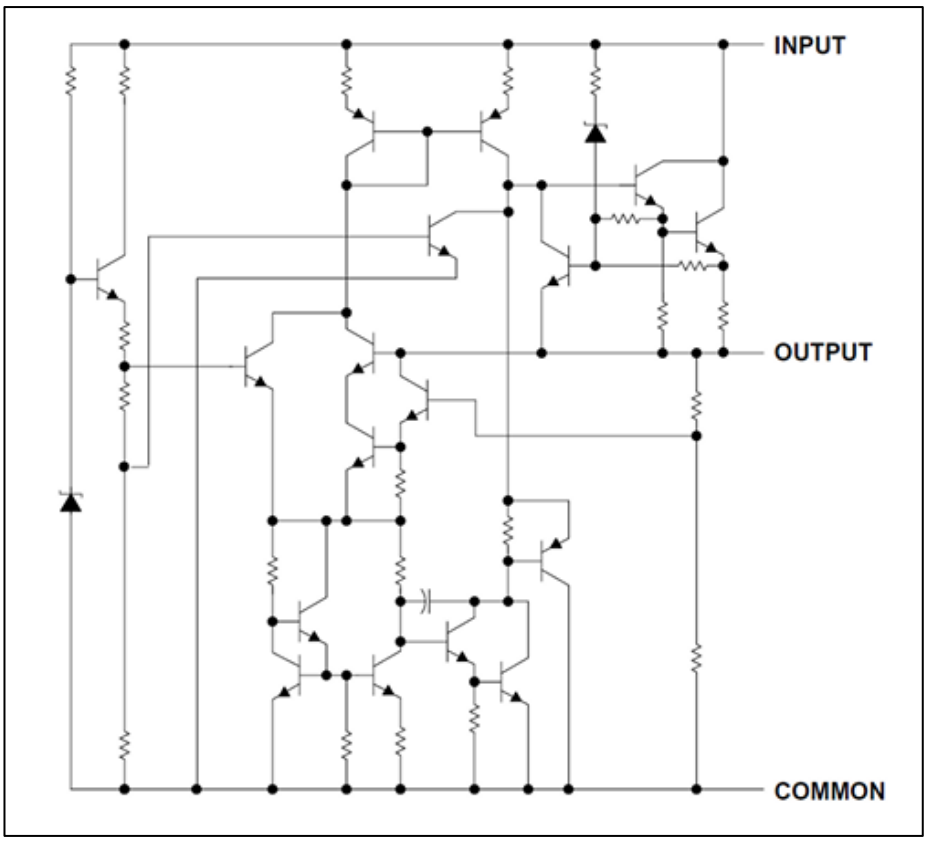

Figure 4: Internal Schematic of LM-78XX IC

2) CIRCUIT DIAGRAM:

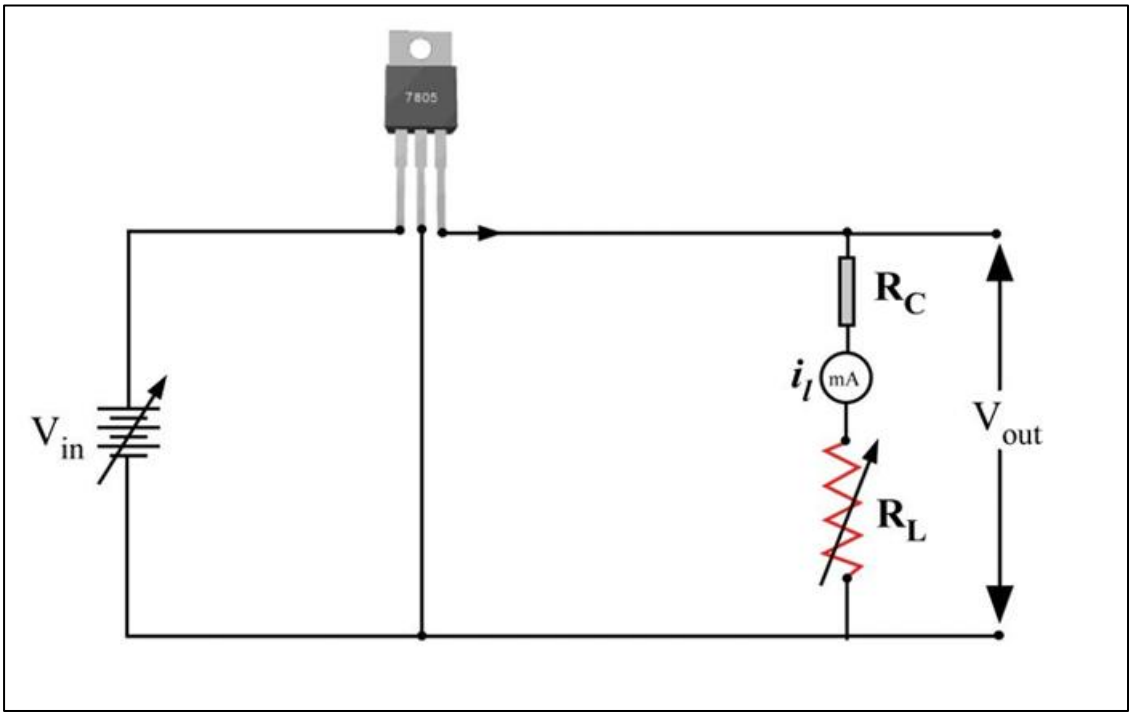

Figure 5: Circuit Diagram of IC

3) OBSERVATIONS AND CALCULATIONS:

The entire data for this experiment can be found at this link:

https://docs.google.com/spreadsheets/d/1VmT6Wf0Wax6PgpOqL2ajzA2zjVttcpc3/edit?usp=sharing&ouid=114042901282709641907&rtpof=true&sd=true

a) Line Regulation:

In line regulation, output constant current limiting series resistance, R_C and load resistance, R_L are fixed, only input voltage, V_{in} is varied. Output voltage, V_0 remains the same at V_Z and i_L remains constant as long as the input voltage is maintained above a minimum value.

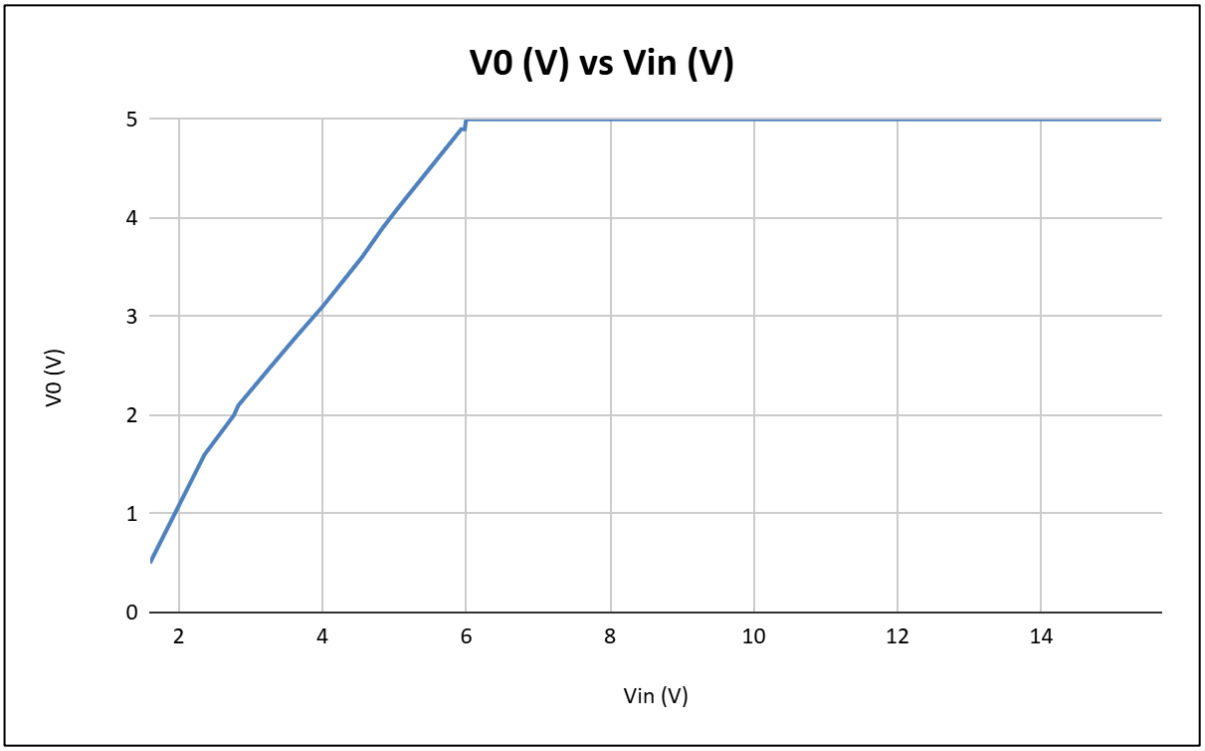

As we can see, V_o smoothens out to 5 V after V_{in} = 6 V. Thus **V_{min} = 6 V.**

b) Load Regulation:

In load regulation, input voltage, Vin remains constant and the load resistance, RL is varied. Output voltage remains same irrespective of load.

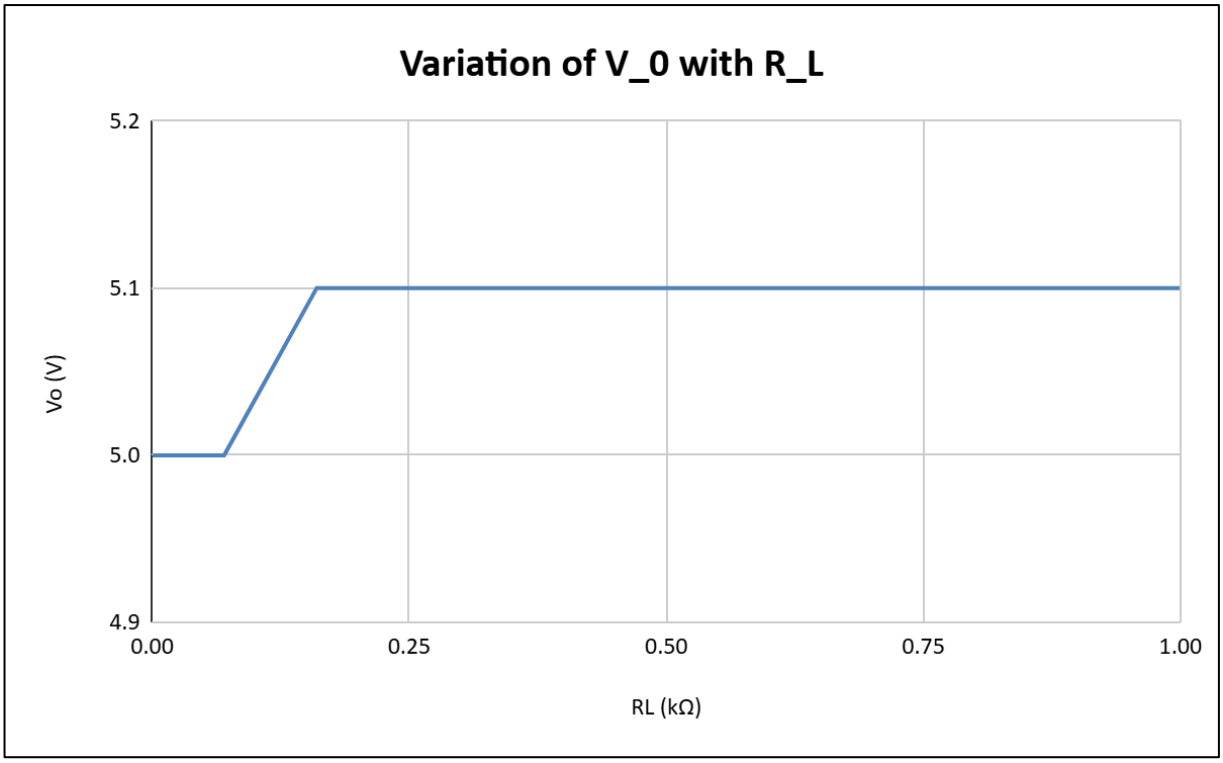

As can be seen, V_0 remains constant after a particular value of R_L.

CONCLUSION:

We showed the effectiveness of Zener Diode as a voltage regulator and the effect of current limiting constant resistor on determination of breakdown voltage of the zener diode. We also showed how a modern-day Voltage Regulator IC can regulate voltage much more smoothly and over a wider range of input voltage/current than a Zener diode shunt regulator.

- Breakdown Voltage of Zener Diode = (5.45 + 5.5)/2 = 5.475 V
- Minimum voltage for which IC 7805 regulates voltage = 6 V

SOURCES OF ERROR:

- The Zener voltage is not perfectly constant; it varies slightly with current (dynamic resistance) and temperature.
- If the input voltage is not sufficiently higher than 5 V, the IC-7805 cannot regulate properly.
- The wires and multimeter may be faulty resulting in fluctuations and errors in readings.
- Rotating the voltage knob on power supply in opposite direction may result in some error.
- The circuit components must be connected properly to the breadboard to avoid loose connection.